DESIGN CONCEPT



BRANDING MOMENTS

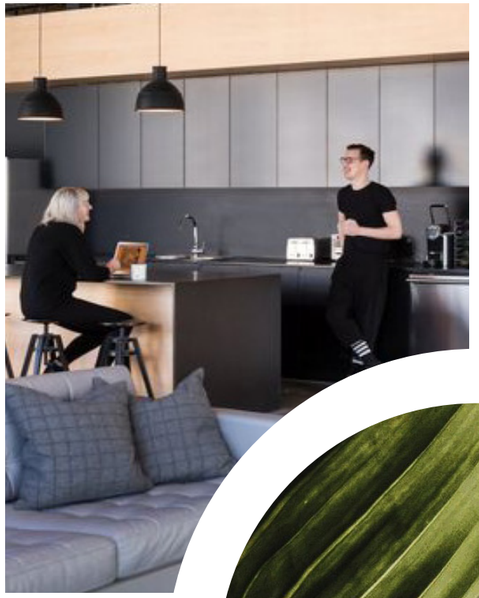



WARM AND NATURAL

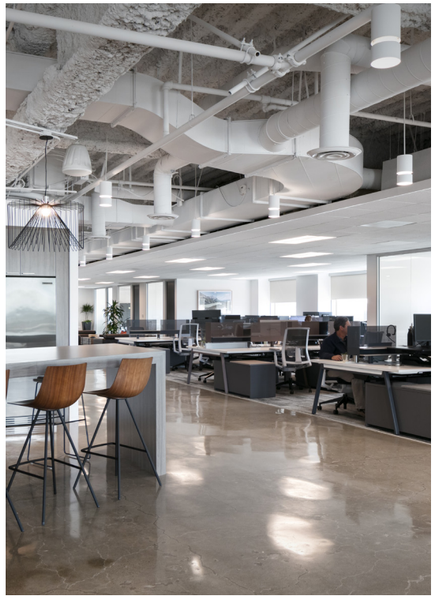



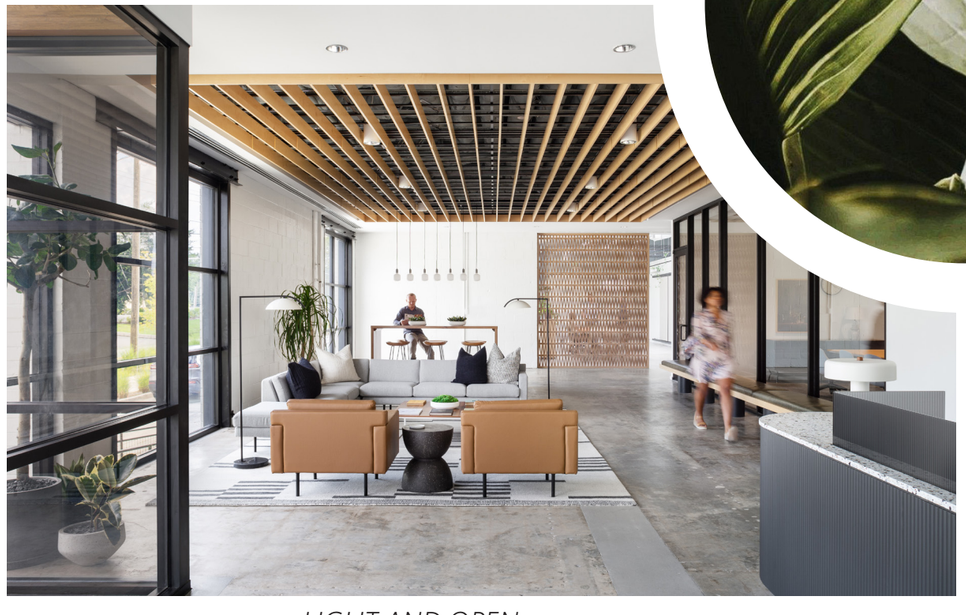

LIGHT AND OPEN





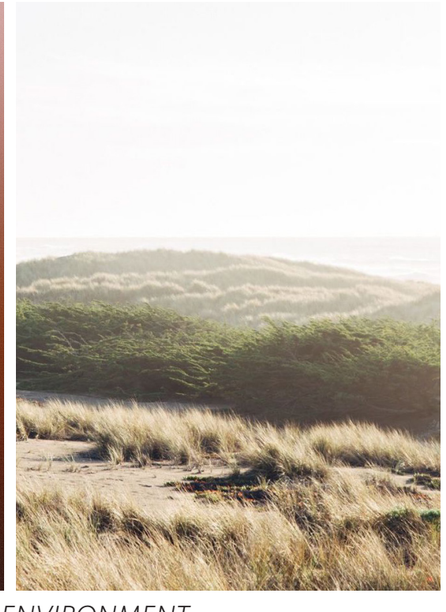

INSPIRED BY THE NATURAL ENVIRONMENT

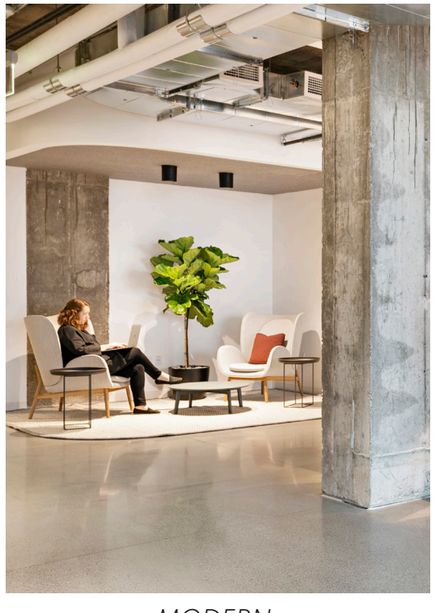

MODERN

LOOK+FEEL

DESIGN CONCEPT



DIAGRAM LEGEND

- ACCESS TO NATURAL LIGHT
- OPEN COLLABORATION
- SHARED WORKSPACE
- CENTRAL HUB

SPACE PLANNING DIAGRAM

ARRIVAL EXPERIENCE - RECEPTION AND CORRIDOR DETAILS

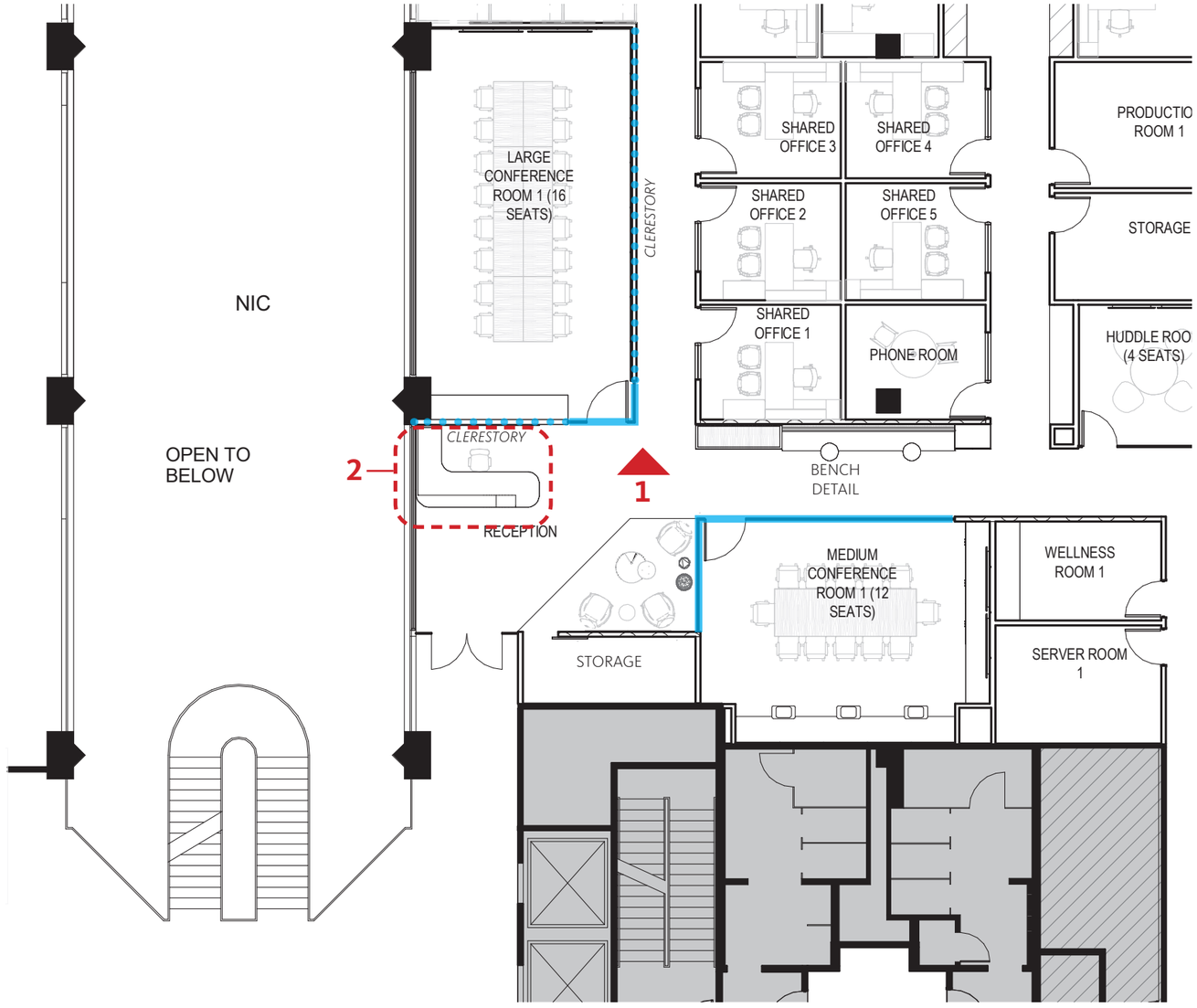

KEY PLAN

ARRIVAL EXPERIENCE - RECEPTION



ARRIVAL EXPERIENCE - RECEPTION AND CORRIDOR DETAILS

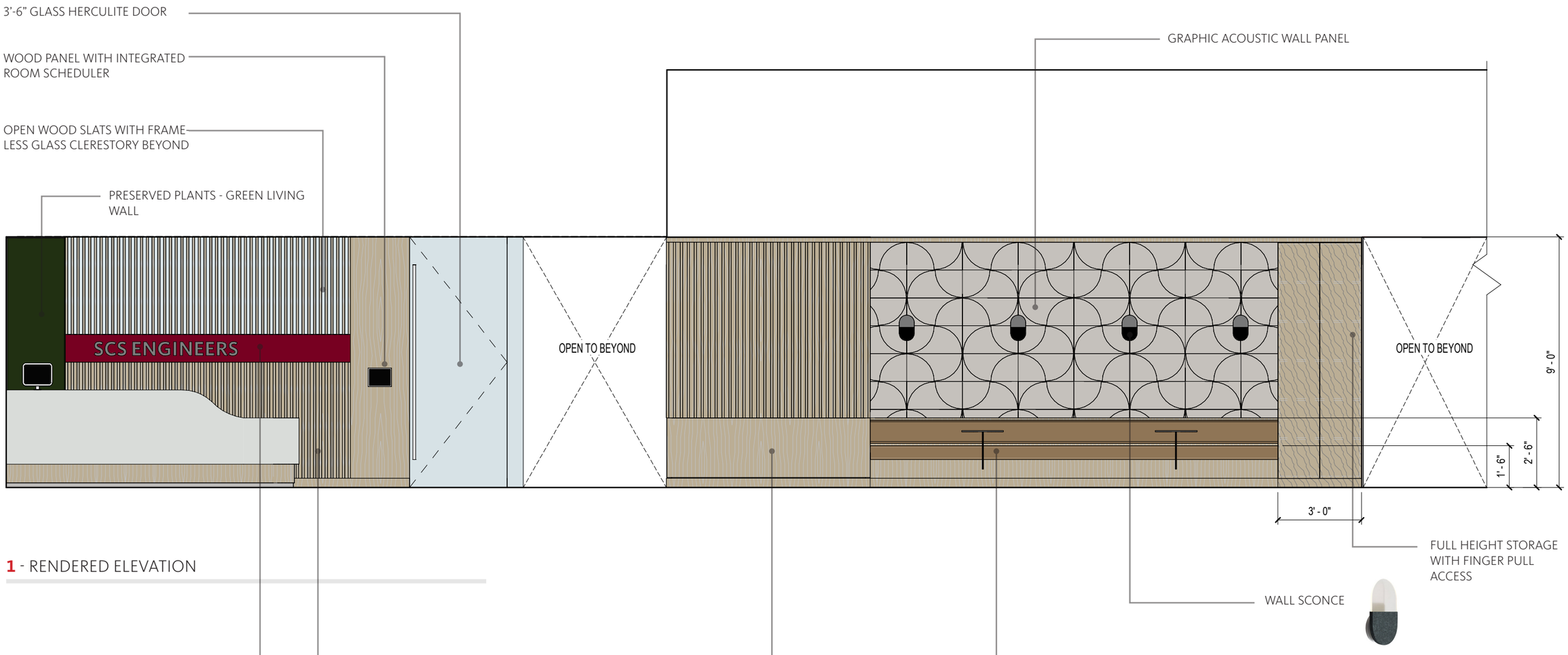

1 - RENDERED ELEVATION

RECEPTION DESK

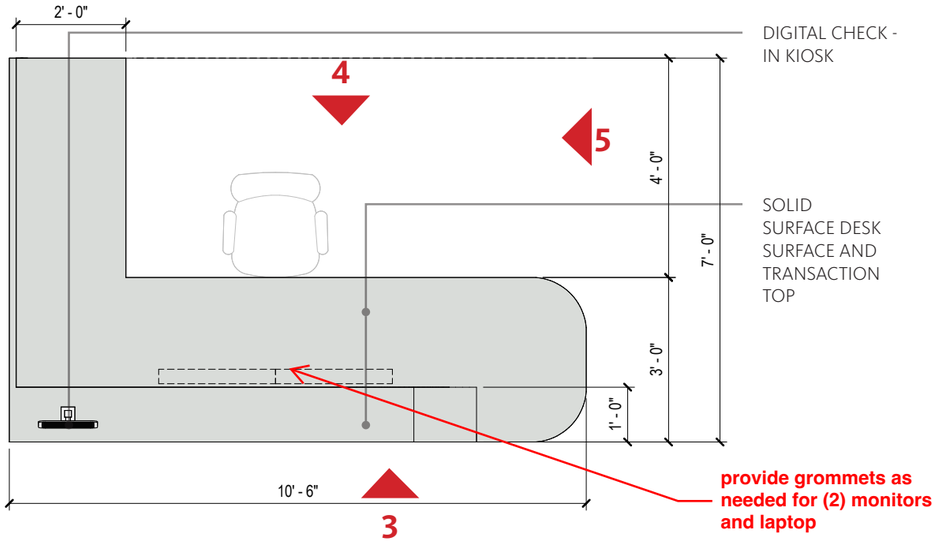

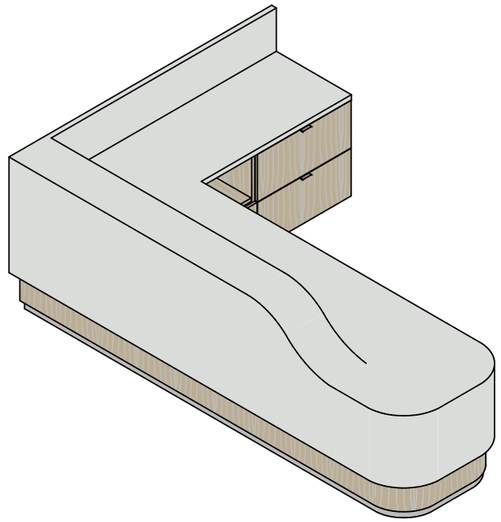

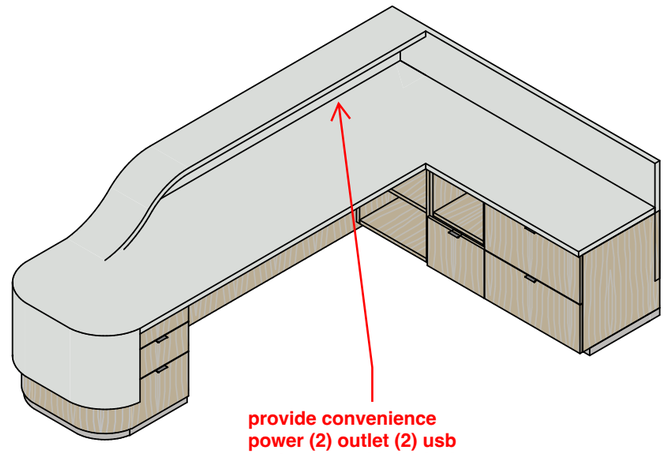

2 - ENLARGED FLOOR PLAN

FRONT 3D AXON VIEW

BACK 3D AXON VIEW

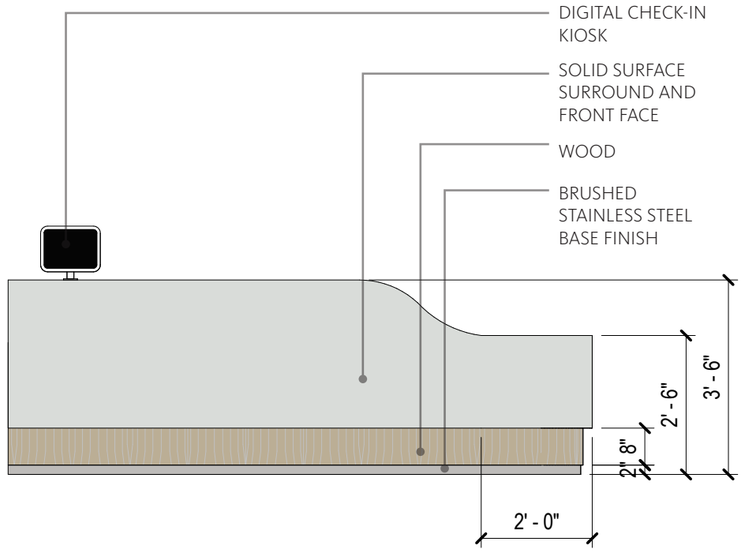

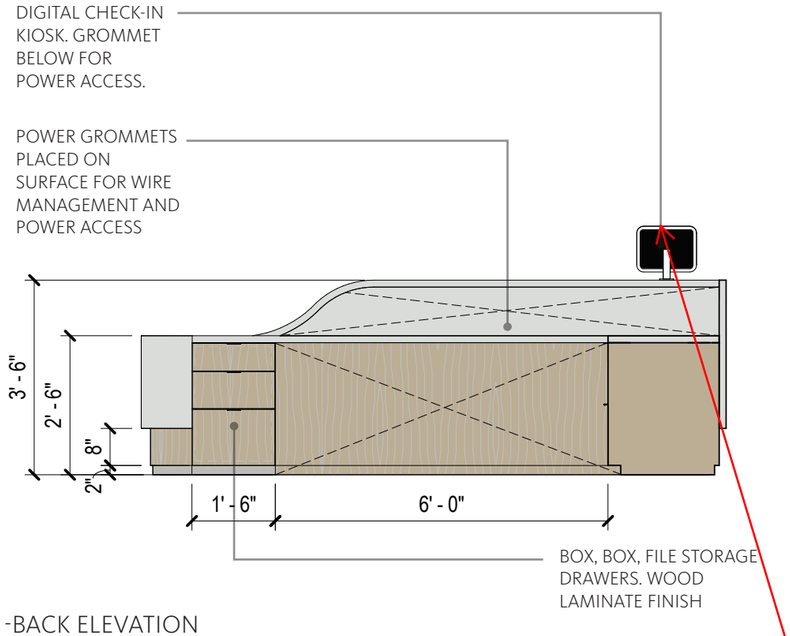

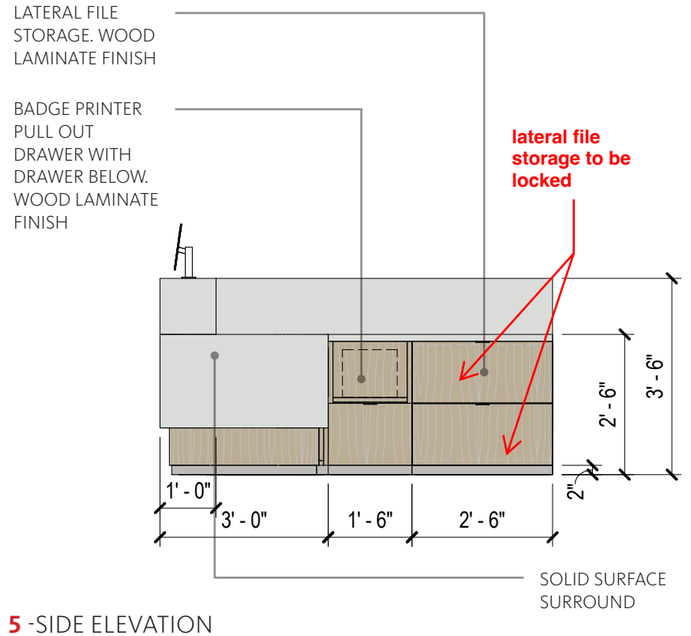

3 -FRONT ELEVATION

4 -BACK ELEVATION

5 -SIDE ELEVATION


SCS ENGINEERS
The Steams Room
SCS ENGINEERS
SCS ENGINEERS
SCS ENGINEERS


SCS ENGINEERS
The Stearns Room

ARRIVAL EXPERIENCE - CORRIDOR DETAILS

HUDDLE ROOM AND BREAK AREA

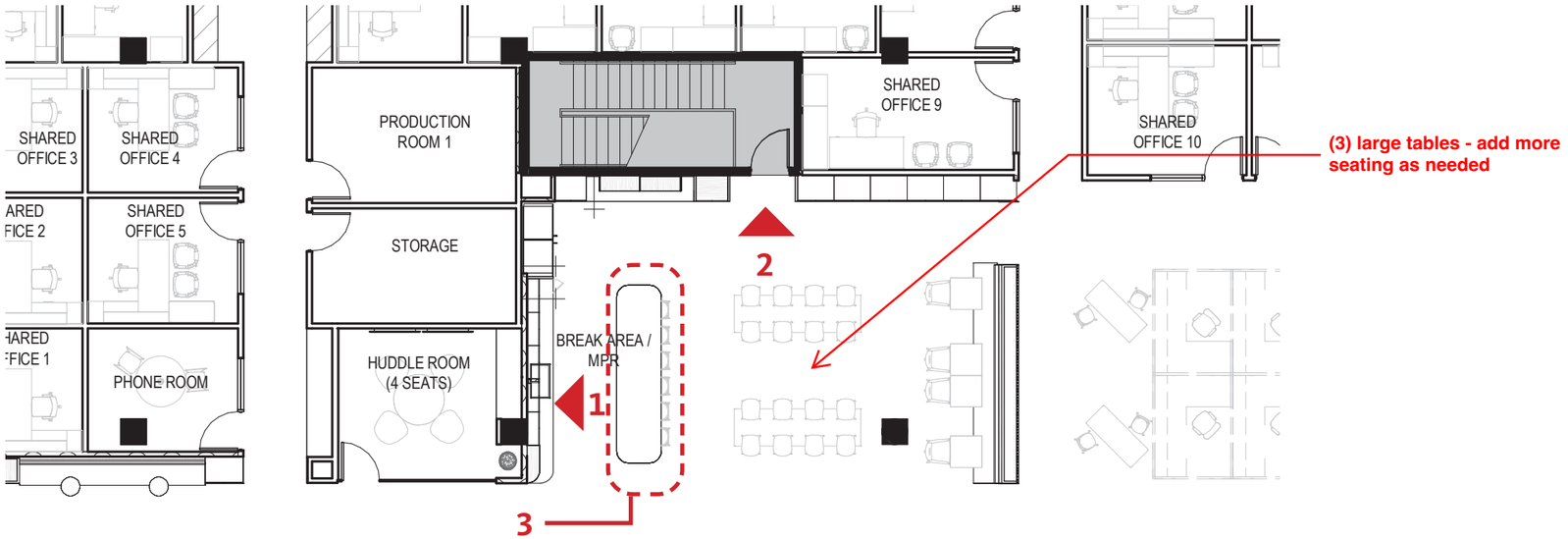

KEY PLAN

HUDDLE ROOM



BREAK AREA

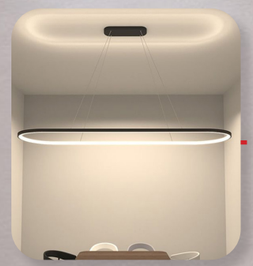



BREAK AREA



BREAK AREA

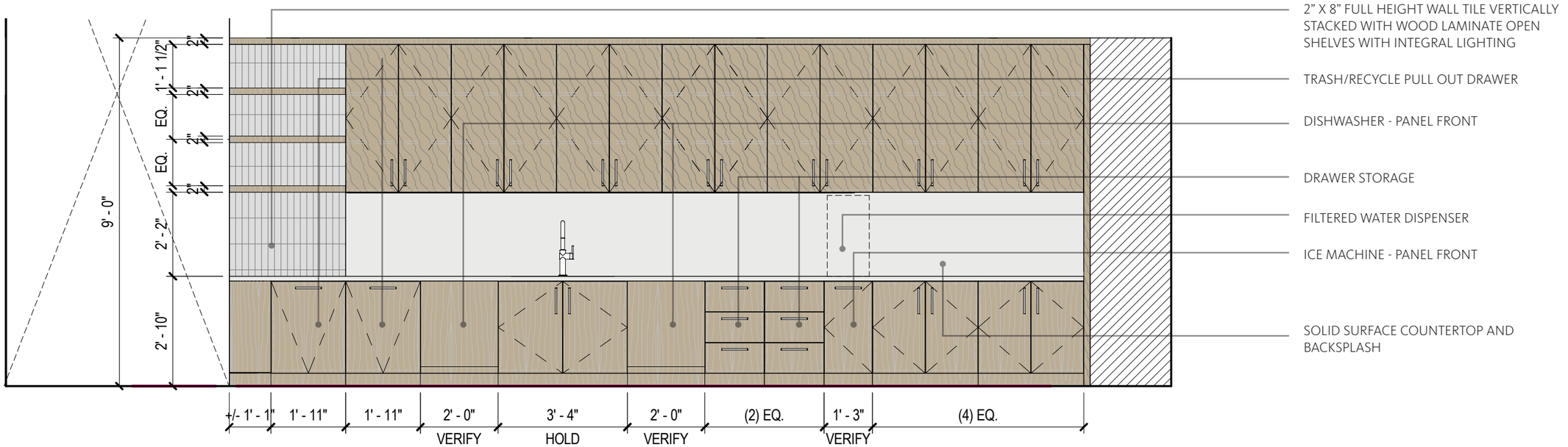

1 - ELEVATION - WEST

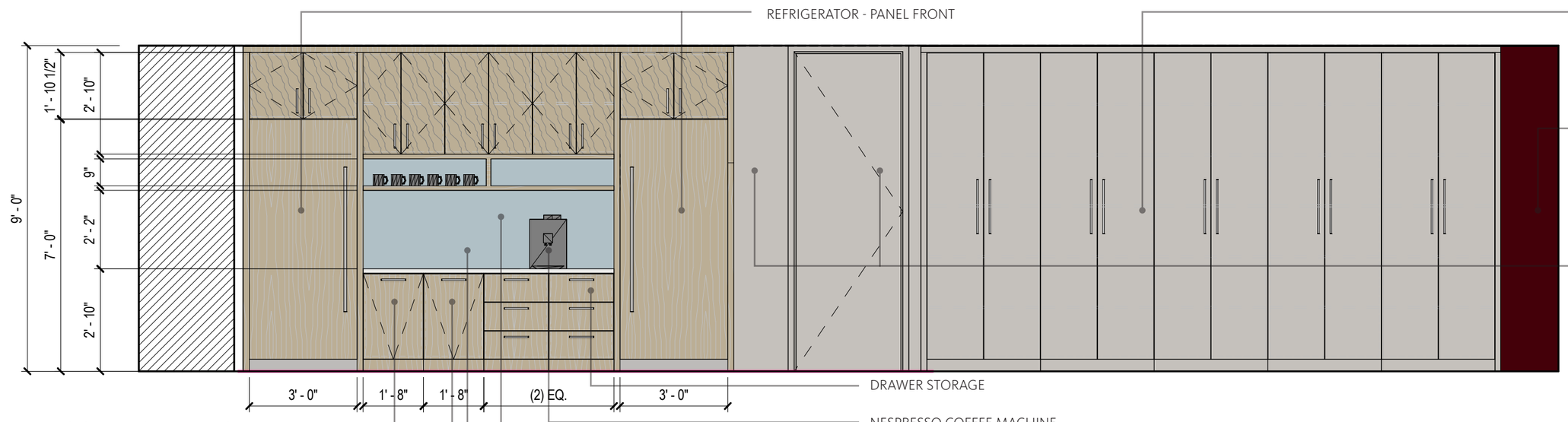

2 - ELEVATION - NORTH

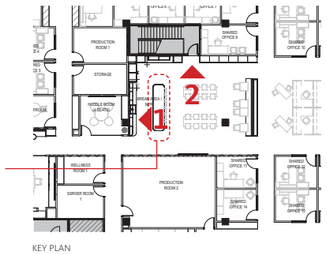

KEY PLAN

BREAK AREA - ISLAND

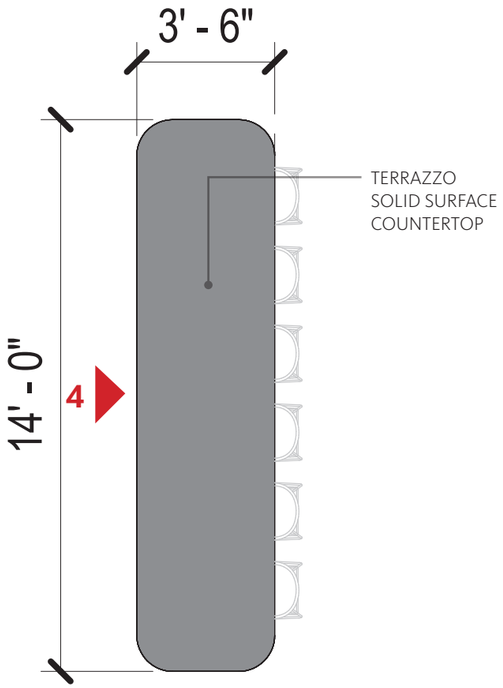

3 - ENLARGED FLOOR PLAN

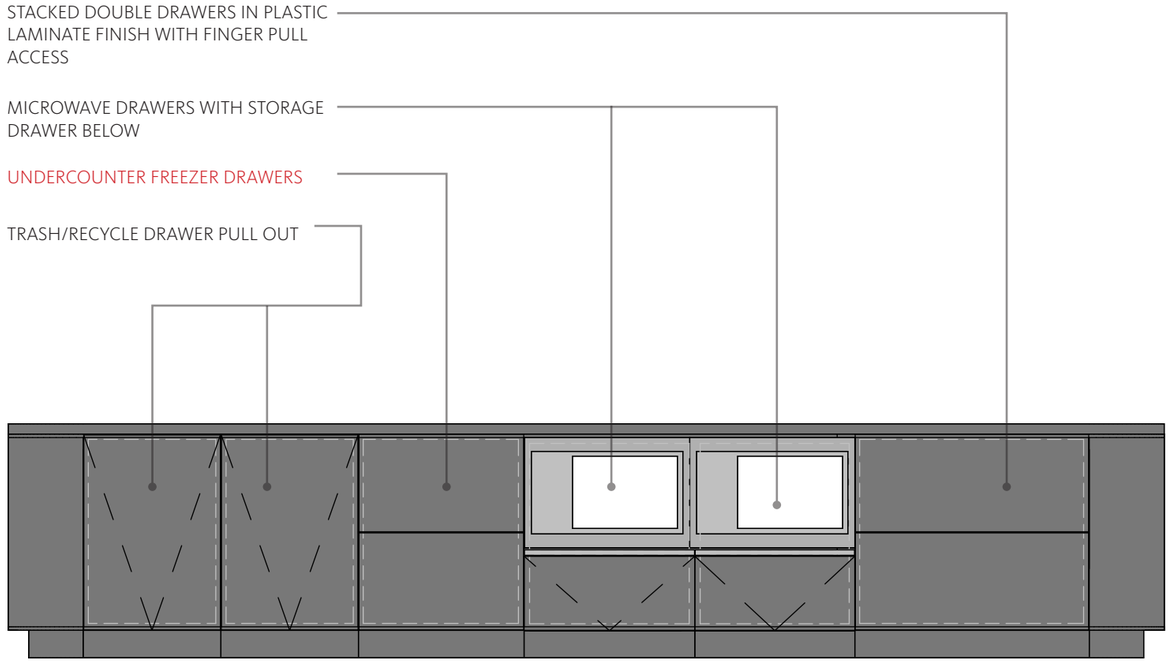

4 - ELEVATION



KEY PLAN

BREAK AREA - OPTIONAL PLANNING

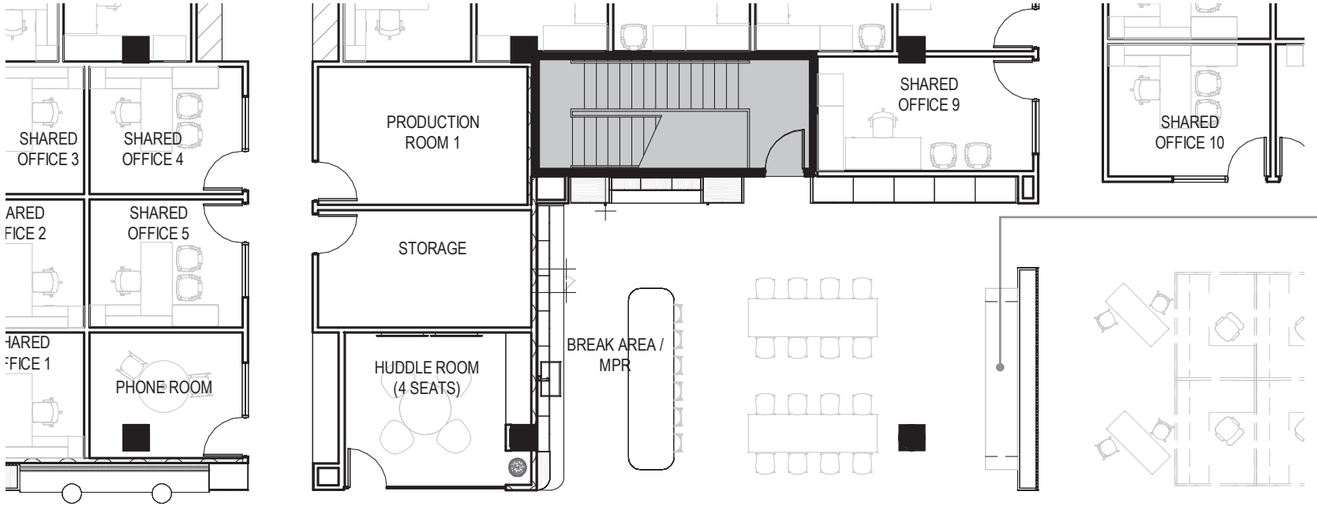

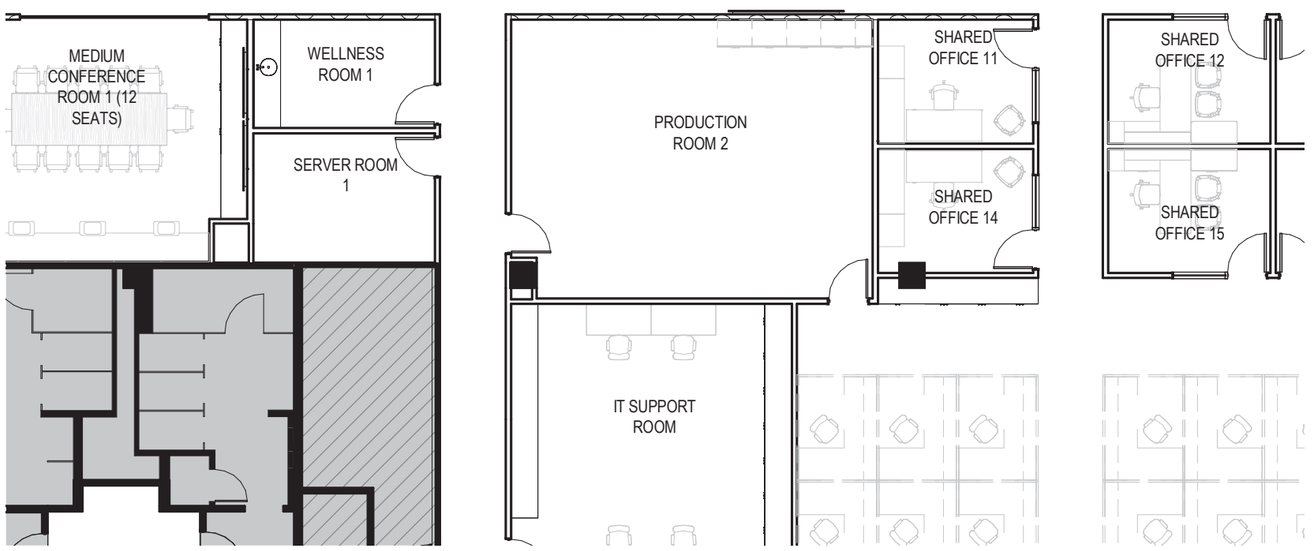

FLOOR PLAN

CONFERENCE ROOM - MILLWORK

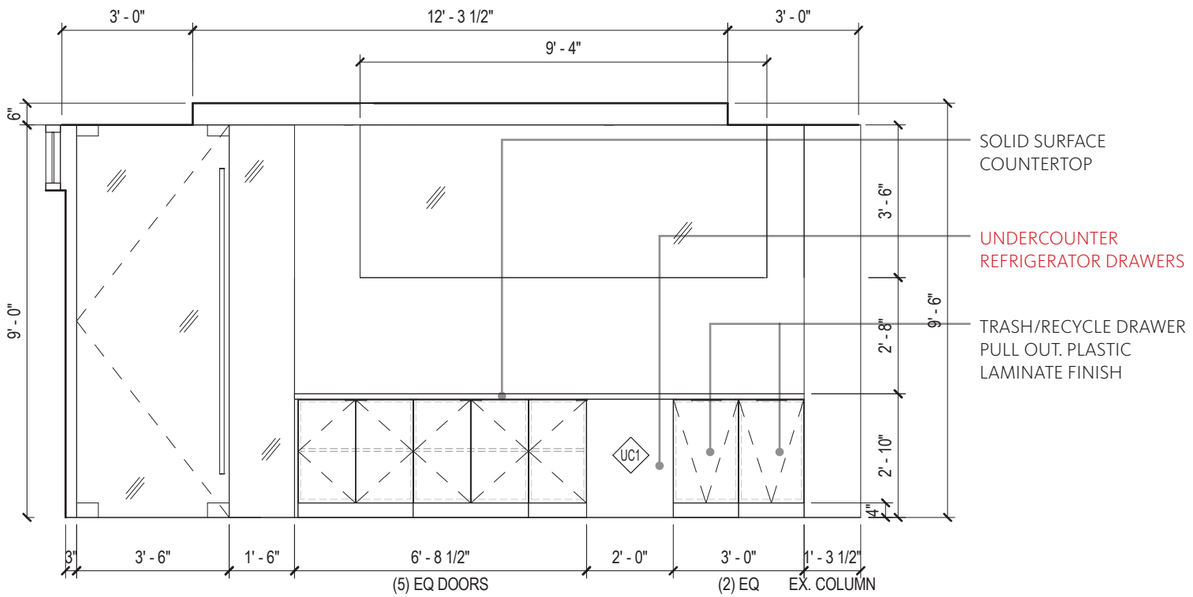

1 -LARGE CONFERENCE ROOM - CREDENZA (11'-8 1/2")

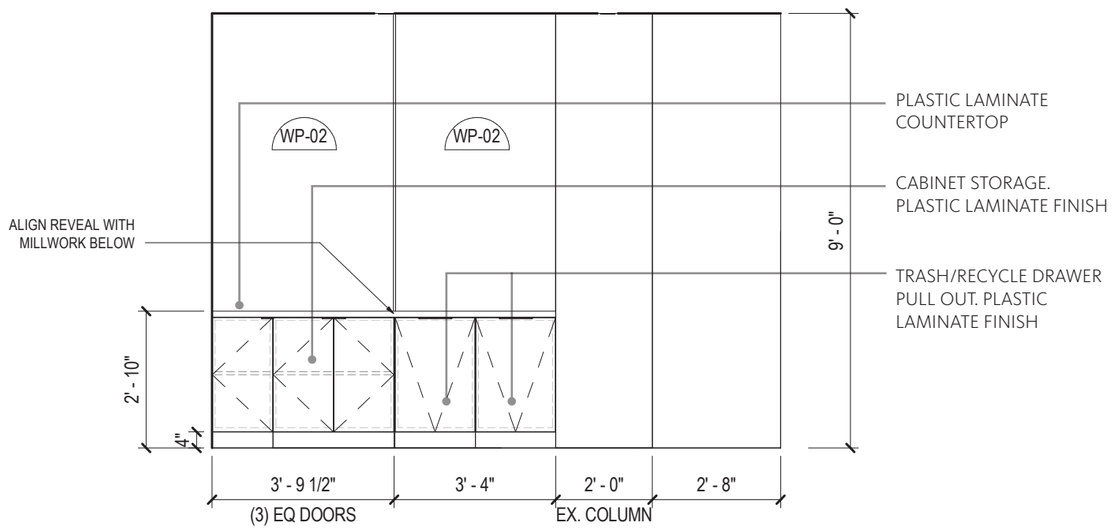

3 -HUDDLE ROOM CREDENZA

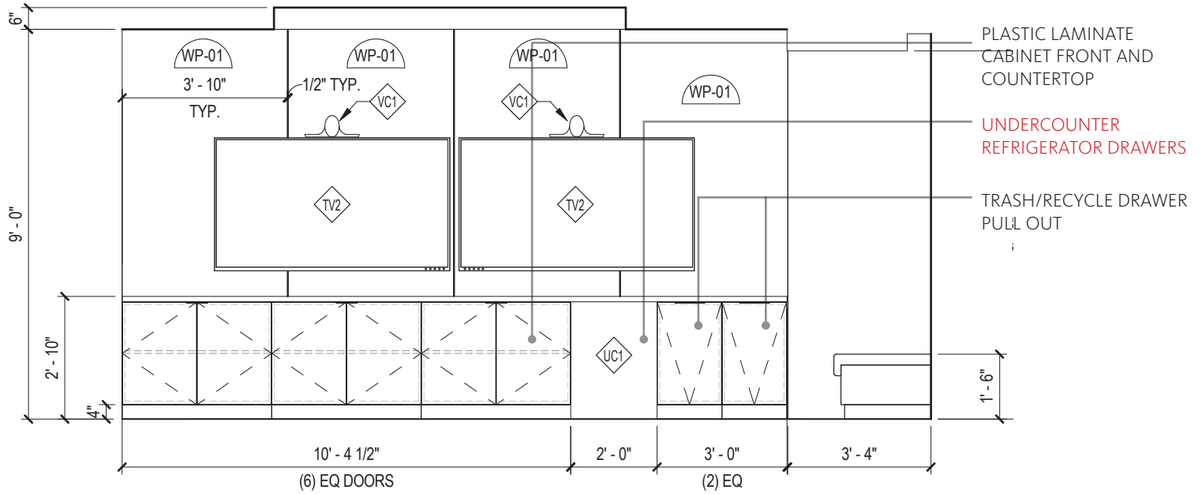

2 -MEDIUM CONFERENCE ROOM - CREDENZA

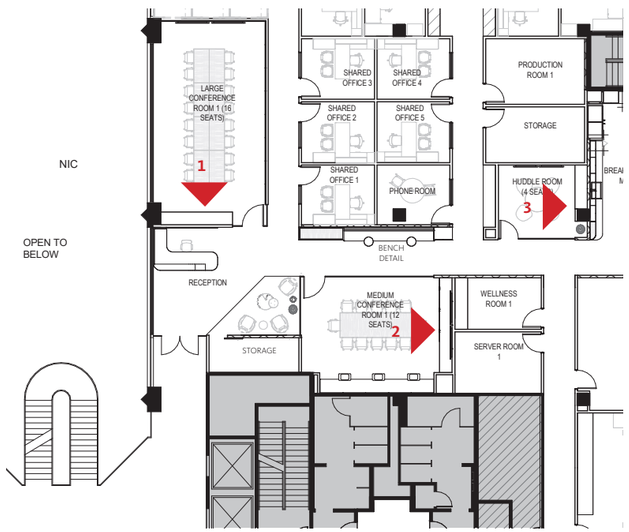

KEY PLAN

WELLNESS ROOM - MILLWORK

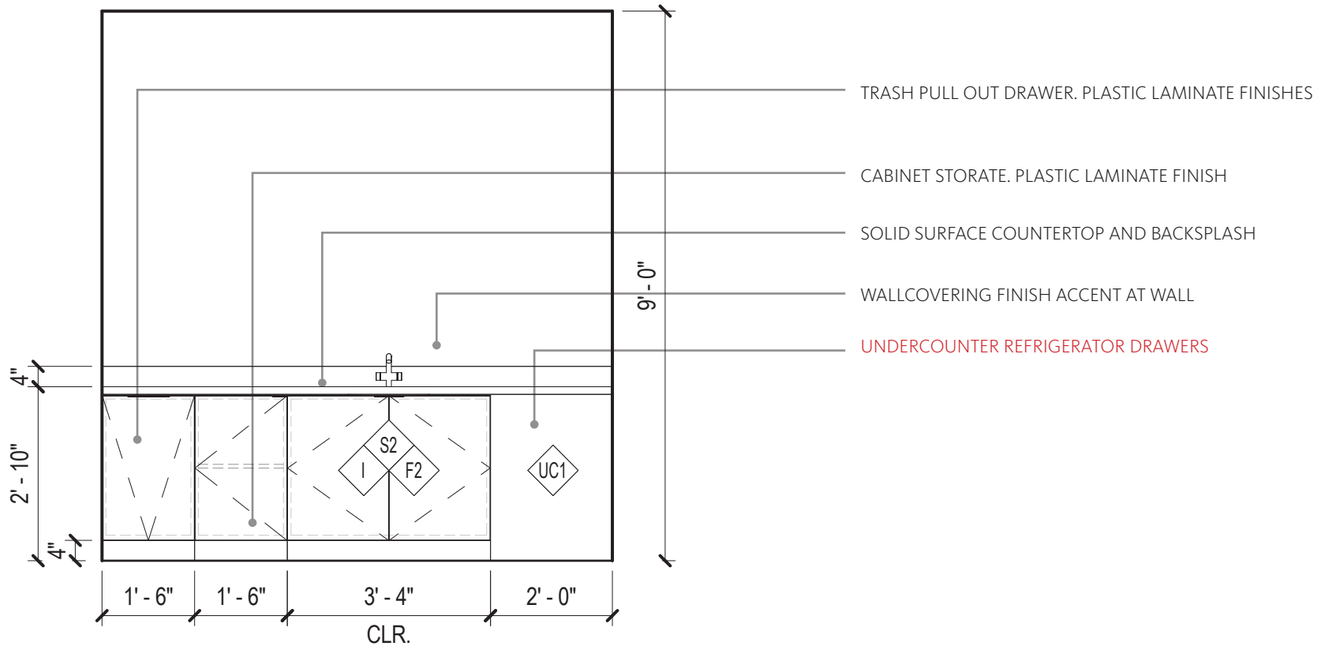

1 -WELLNESS ROOM - MILLWORK ELEVATION

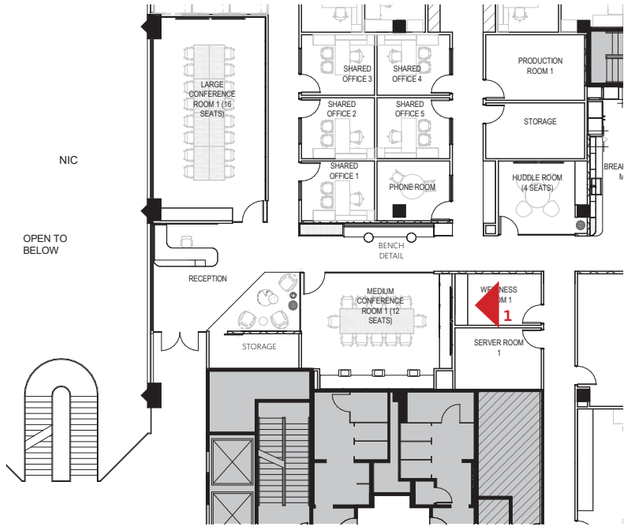

KEY PLAN

IT SUPPORT ROOM

NO MILLWORK REQUIREMENTS



FLOOR PLAN

COPY / PRINT AND STORAGE LOCATIONS

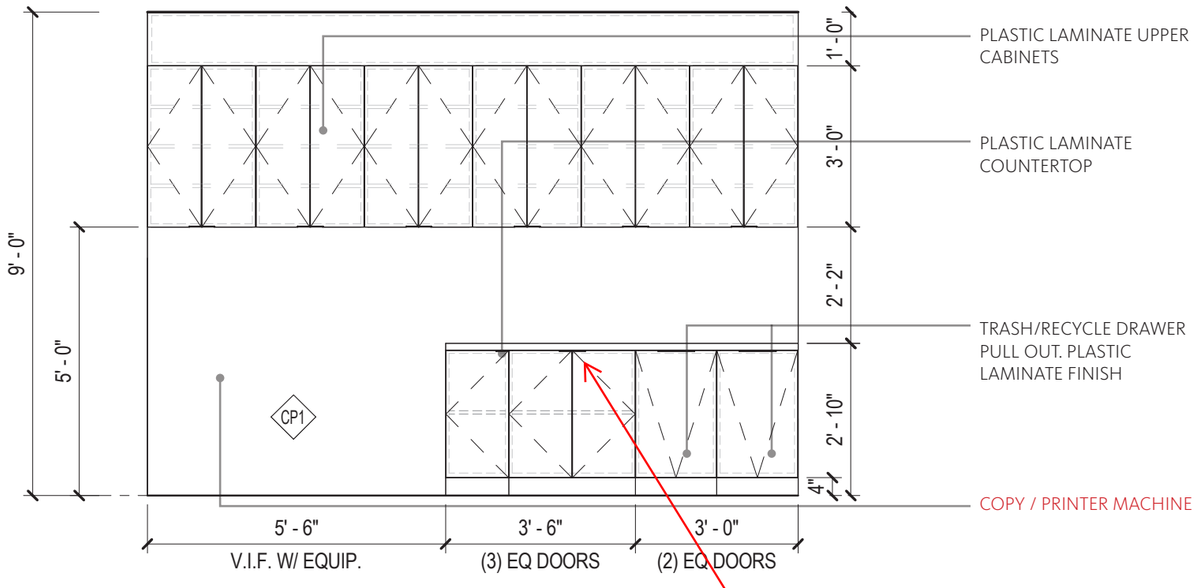

1 -COPY / PRINT STORAGE #1 - NW - ELEVATION

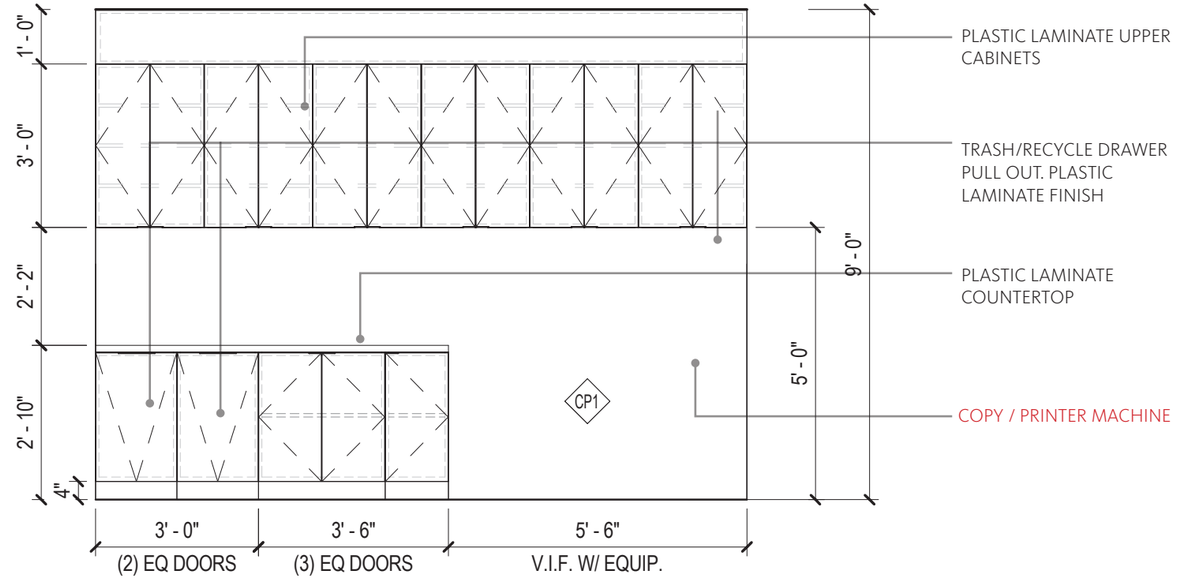

2 -COPY / PRINT STORAGE #2 - NE - ELEVATION

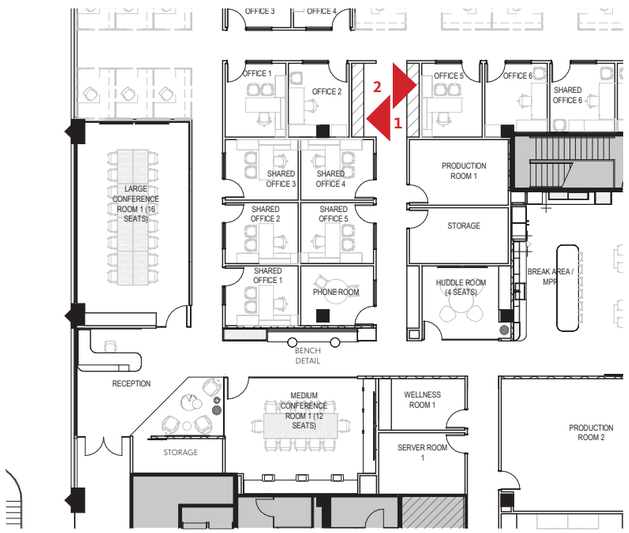

KEY PLAN

COPY / PRINT AND STORAGE LOCATIONS

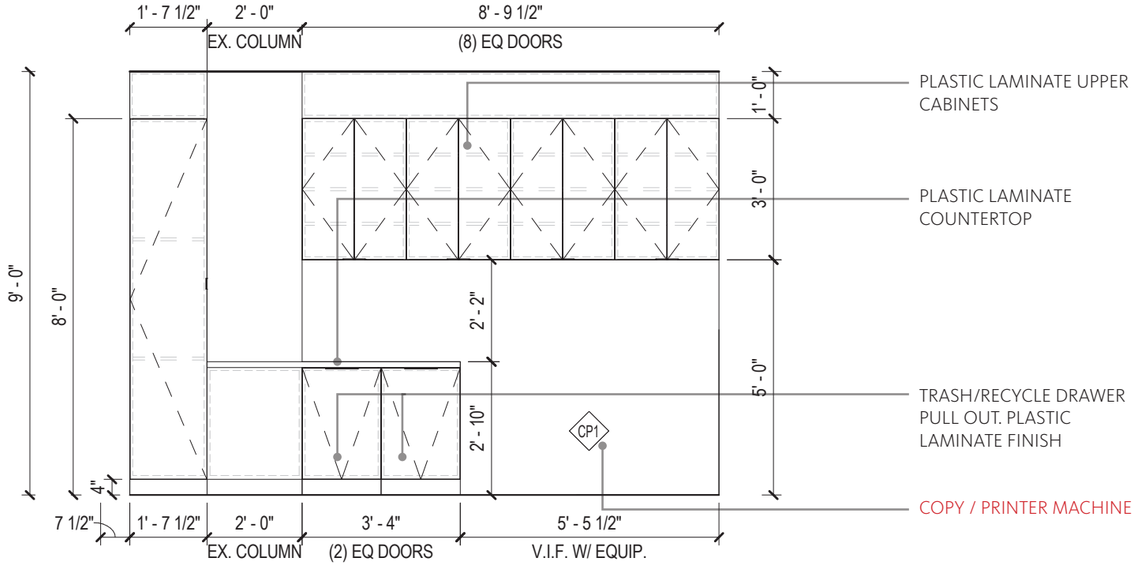

1 -COPY / PRINT # 4 - N - ELEVATION

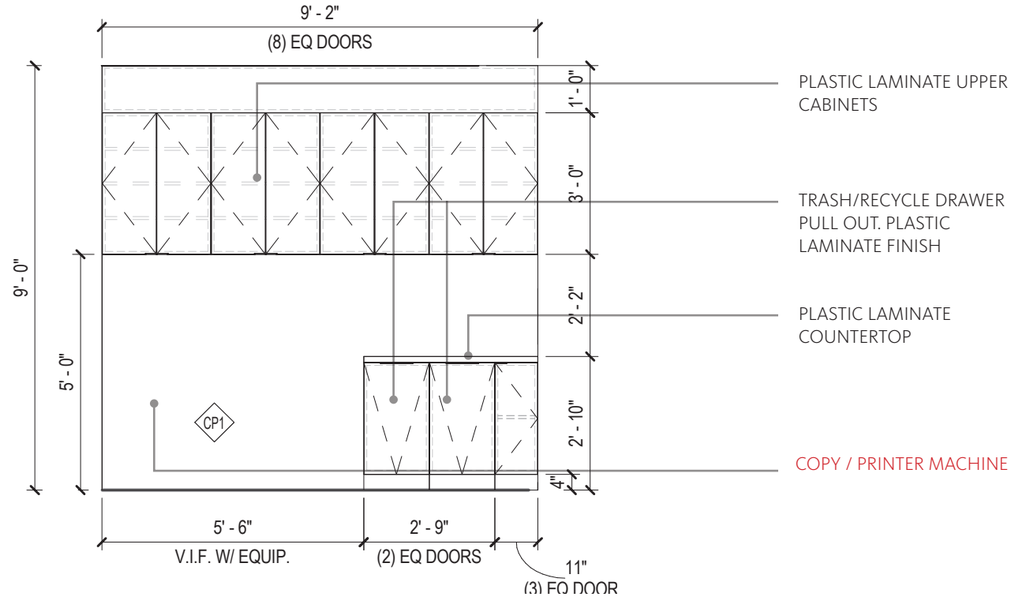

2 -COPY / PRINT STORAGE #3 - SE - ELEVATION



KEY PLAN

SCS ENGINEERS

Gensler